HEXAGON | TESA TECHNOLOGY

TESA HITS 2021

Version EN–EUR

Best prices valid until 30.06.2021

Prices exclude VAT

Improve your production with our high quality measuring instruments!

Sets of analogue instruments

00511001

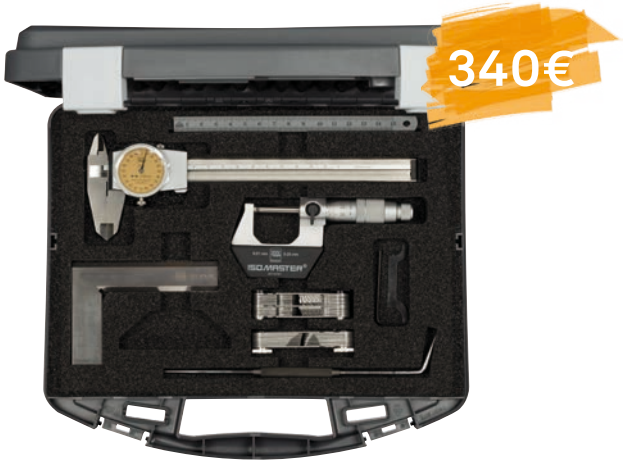

00511002

Part number	Designation	List price [€]	Promo price [€]
00511001	Set ISOMASTER (0÷25 mm) + vernier caliper (150 mm, 0,02 mm) + accessories	343	**275**
00511002	Set ISOMASTER (0÷25 mm) + CCMA-M (150 mm, 0,02 mm) + accessories	426	**340**
Accessories:			
Flexible rule, stainless steel, 150 mm			
Bevelled edge square, steel, 100x70 mm			
Radius gauge concave/convex, R1÷R7			
Screw pitch gauge, metric/Whitworth			
Scriber, steel			

Workshop calipers

00510701

Part number	Model	Measuring range [mm]	Measuring range [in]	Resolution [mm]	Resolution [in]	List price [€]	Promo price [€]
00510701	Workshop vernier models with knife-edge external jaws	200		0,02		110	**88**
00510702	Workshop vernier models with knife-edge external jaws	200		0,05		110	**88**
00530702	Workshop vernier models with knife-edge external jaws	200	8	0,05	1/128	115	**92**
00510721	Workshop vernier models with knife-edge external jaws	300		0,02		130	**104**
00510722	Workshop vernier models with knife-edge external jaws	300		0,05		130	**104**
00530722	Workshop vernier models with knife-edge external jaws	300	12	0,05	1/128	135	**108**
00510741	Workshop vernier models with knife-edge external jaws	500		0,02		310	**248**
00510742	Workshop vernier models with knife-edge external jaws	500		0,05		310	**248**
00530742	Workshop vernier models with knife-edge external jaws	500	20	0,05	1/128	315	**252**

Universal calipers

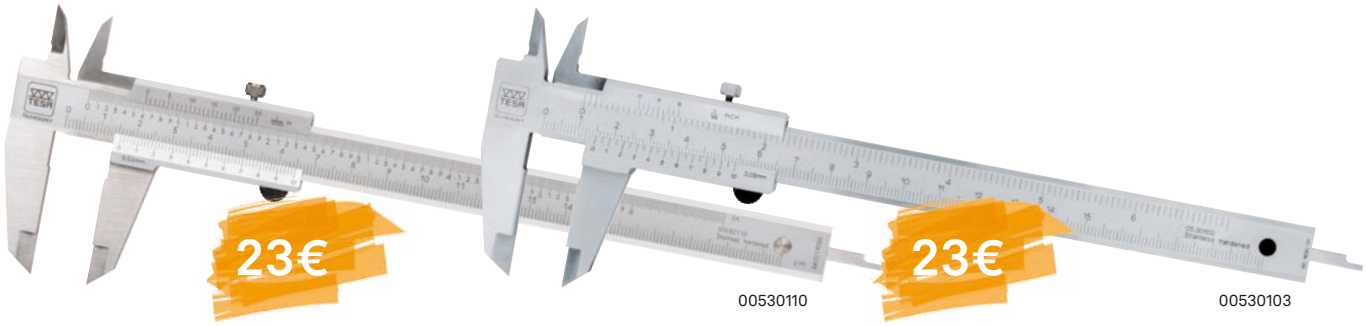

Part number	Model	Measuring range [mm]	[in]	Resolution [mm]	[in]	List price [€]	Promo price [€]
00530103	Universal vernier caliper	150	6	0,05	1/128	29	**23**
00530110	Universal vernier caliper	150	6	0,02	.001	29	**23**

Part number	Model	Measuring range [mm]	Resolution [mm]	mm/ revolution	List price [€]	Promo price [€]
00510004	Dial caliper, plastic housing	150	0,02	2	114	**89**
00510008	Dial caliper, metal housing	150	0,02	2	130	**105**

Part number	Model	Measuring range [mm]	Thumb roller	Depth rod	List price [€]	Promo price [€]
00530140	Universal digital caliper, TESA-CAL IP67	150	–	■	99	**81**
00530141	Universal digital caliper, TESA-CAL IP67	150	–	●	99	**81**
00530142	Universal digital caliper, TESA-CAL IP67	200	✓	■	148	**121**
00530143	Universal digital caliper, TESA-CAL IP67	300	✓	■	199	**163**

TESATAST

Part number	Designation	Measuring range [mm]	Resolution [mm]	Dial [Ø, mm]	List price [€]	Promo price [€]
01810005	TESATAST	0,8	0,01	28	118	**97**
01810010	TESATAST	0,2	0,002	38	153	**125**
S18001695	TESATAST	0,2	0,001	38	176	**139**

FROM 97€

S18001695

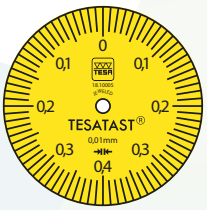

01810005

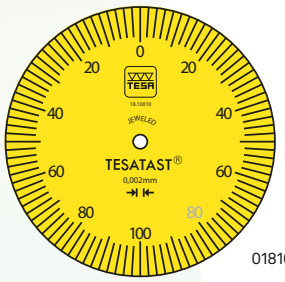

01810010

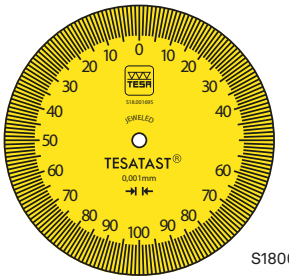

S18001695

Indicators

DIGICO *Series 600*:
- 12,5 mm or 25 mm
- OPTO-RS232 or OPTO-USB
- rotatable dial
- numerical tolerances
- PRESET
- value storage max, min, max-min

381€

01930256
DIGICO 605 MI

458€

01930257
DIGICO 610 MI

79€

01419047

47€

01419048

DIGICO *Series 700*:
- 12,5 mm
- OPTO-RS232 or OPTO-USB
- rotatable dial
- numerical tolerances
- PRESET
- value storage max, min, max-min
- + bore measurement (see page 5)

399€

01930258
DIGICO 705 MI

199€

01419051

Part number	Designation	Measuring range [mm]	Resolution [mm]	Dial [Ø, mm]	List price [€]	Promo price [€]
01930256	Digital indicator DIGICO 605 MI	12,5	0,001	57,1	465	**381**
01930257	Digital indicator DIGICO 610 MI	25	0,001	57,1	558	**458**
01930258	Digital indicator DIGICO 705 MI	12,5	0,001	57,1	508	**399**
01419047	Analogue dial gauge TESA ETALON	5	0,01	40	99	**79**
01419048	Analogue dial gauge TESA ETALON	10	0,01	58	59	**47**
01419051	Analogue high-precision dial gauge TESA ETALON	0,1	0,001	62	259	**199**

VERIBOR

Part number	Application range [mm]	List price [€]	Promo price [€]
05710012	4,5 ÷ 6	1298	**1050**
05710013	6 ÷ 12,5	1015	**810**
05710014	12 ÷ 25	573	**460**
05710015	25 ÷ 50	639	**510**
05710016	50 ÷ 150	747	**595**
05710017	240 ÷ 550	1700	**1360**
05710018	50 ÷ 300	954	**765**

dial gauge and protection not included

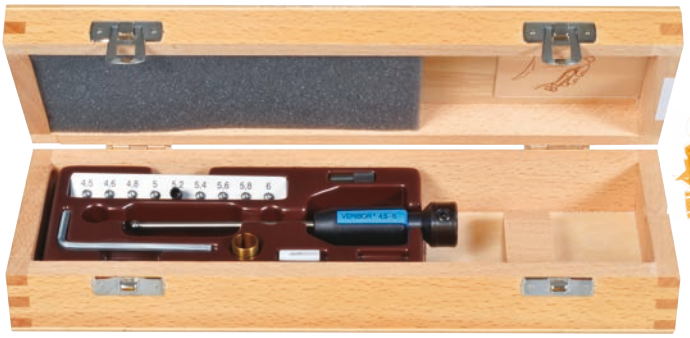

FROM 460€

05710012

284€

01639023

Measuring supports

Part number	Designation	List price [€]	Promo price [€]
01639023	INTERAPID magnetic support with articulated arm, H = 390 mm with dovetail clamp with a Ø 8 mm clamping bore.	346	**284**
01639035	Table measuring support with granite, column Ø 20, with Ø 8 mm clamping bore.	406	**333**

333€

01639035

Analogue internal micrometers IMICRO

00812306

FROM 331€

Part number	Designation	Measuring range [mm]	Resolution [mm]	Maximum permissible error [µm]	Repeatability limit [µm]	List price [€]	**Promo price [€]**
00810001	Analogue IMICRO	6 ÷ 8	0,001	4	4	404	**331**
00810002	Analogue IMICRO	8 ÷ 10	0,001	4	4	407	**334**
00810003	Analogue IMICRO	10 ÷ 12	0,001	4	4	410	**336**
00810801	Analogue IMICRO	11 ÷ 14	0,005	4	4	462	**379**
00810802	Analogue IMICRO	14 ÷ 17	0,005	4	4	466	**382**
00810803	Analogue IMICRO	17 ÷ 20	0,005	4	4	471	**386**
00811501	Analogue IMICRO	20 ÷ 25	0,005	4	4	508	**417**
00811502	Analogue IMICRO	25 ÷ 30	0,005	4	4	516	**423**
00811503	Analogue IMICRO	30 ÷ 35	0,005	4	4	524	**430**
00811504	Analogue IMICRO	35 ÷ 40	0,005	4	4	533	**437**
00812301	Analogue IMICRO	40 ÷ 50	0,005	4	4	626	**513**
00812302	Analogue IMICRO	50 ÷ 60	0,005	5	5	636	**522**
00812303	Analogue IMICRO	60 ÷ 70	0,005	5	5	646	**530**
00812304	Analogue IMICRO	70 ÷ 80	0,005	5	5	655	**537**
00812305	Analogue IMICRO	80 ÷ 90	0,005	5	5	667	**547**
00812306	Analogue IMICRO	90 ÷ 100	0,005	5	5	692	**567**

UNIMASTER Set

- For direct or comparative, internal or external measurements
- Portable, can be used under difficult conditions, particularly suitable when large parts cannot be transported to laboratories
- "Two-in-one" instrument for internal and external, direct or comparative measurement
- No need for large and expensive setting standard thanks to the standard supplied with the instrument
- Ensures stable measuring owing to a shockproof system, negligible deflection and thermal protection

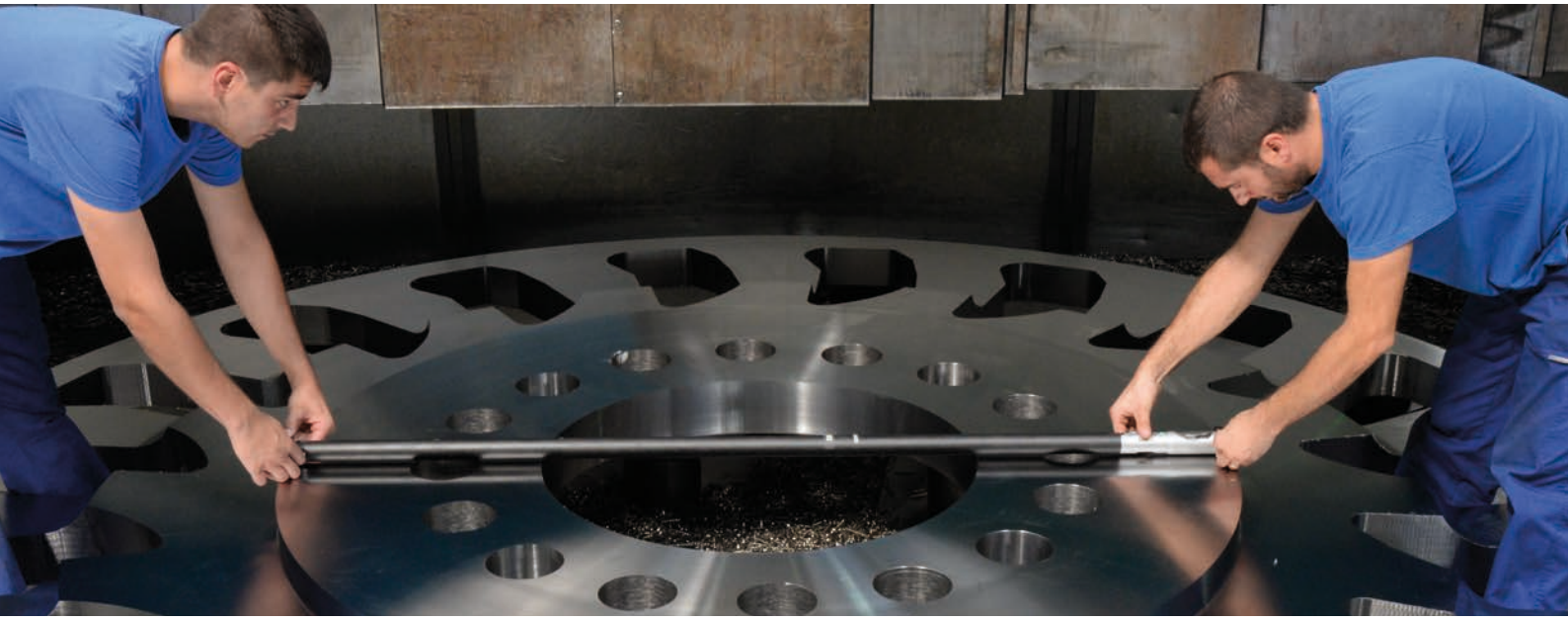

Part number	Designation	Maximum permissible error [µm]	Application range [mm]	List price [€]	**Promo price [€]**
01110000	UNIMASTER, set without 1000 mm extension	5*	int: 250 ÷ 1625 ext: 225 ÷ 1600	22500	**20600**
01110001	UNIMASTER, set with 1000 mm extension	5*	int: 250 ÷ 2325 ext: 225 ÷ 2300	23900	**21900**

* measuring element

01110001

µ-HITE

The µltra compact turnkey solution for the product line

Need a "turnkey solution"?

With its application range of 100 mm, this measuring station for workshops and laboratories is particularly suitable for measuring small parts.

Installed quickly, its high accuracy (1 µm) not only matches the most powerful height gauges, but also 1D probes, which are often expensive to install and less flexible in terms of application.

HIGH ACCµRACY

00730503

SWISS ACCREDITATION sas.admin.ch SCS 0001

SCS certificate included

TESA TLC-BLE COMPATIBLE

Part number	Designation	Maximum permissible errors [µm]	Repeatability limits [µm]	List price [€]	**Promo price [€]**
00730503	µ-HITE	Axial: 1 - offset: 2	Axial: 0,5 - offset: 1	4310	**3950**

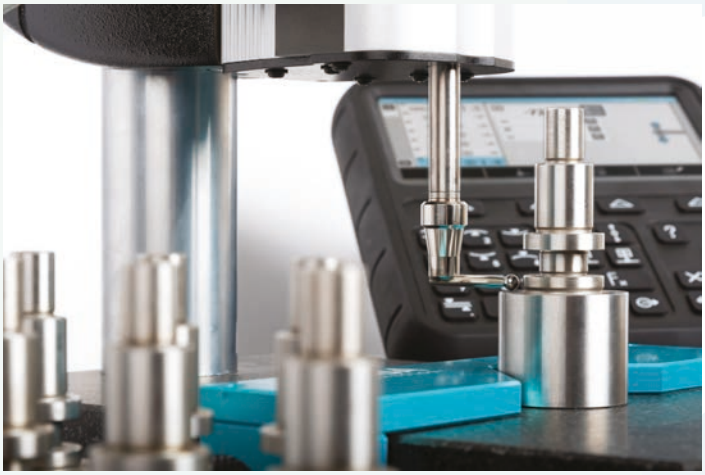

We reserve the right to make changes to our products, especially due to technical improvements and further developments.
All illustrations and technical data are therefore without guarantee. All prices shown are non-binding price recommendations.

©2021 Hexagon AB and/or its subsidiaries and affiliates. All rights reserved.